SPECIFICATION SHEET

LAMPPOST - Model P3

zilux.com

6330 Zéphirin-Paquet Street - Local 1B
G2C 0M3 Québec QC - Canada
info@zilux.com - 418 842-3222

Version April 2025

We reserve the right to change specifications and equipment without notice.

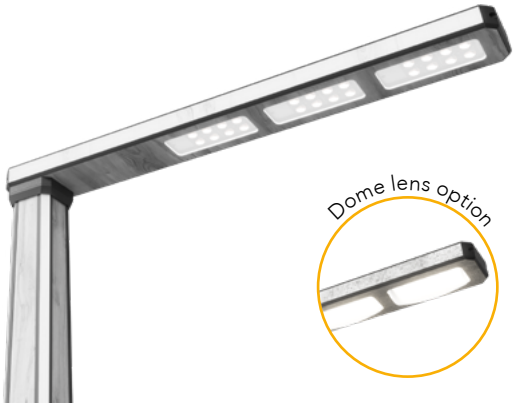

- Up to 7500 lumens
- Dark sky compliant configurations
- LED Accent available on sides of head and pole (optional)
- Patent-pending pole structure design
- Available in 10' to 19' height
- High-definition digital printing
- Low-maintenance DuroClear™ protective coating (no staining, no fading, easy to clean)
- Prewired pole – 24 VDC low-voltage with Easy-access integral drivers
- Cast aluminum base plate and printed base cover included

ORDERING OPTIONS

Model	Head Accents	LED module[1]	Head Texture /Color	Distribution	Color Temperature	Pole Height	Pole Texture /Color	Pole Accents	Bolt circle	Driver	Options
P3	**----**	**----**	**----**	**----**	**----**	**----**	**----**	**----**	**----**	**DIM**	**----**
Model P3	**40K** - 4000K	7500lm, 54W	**XXXX** - See texture chart	**FII** - Flush lens Type II	**27K** - 2700K	**10** - 10ft pole	**XXXX** - See texture chart	**40K** - 4000K	**A** - 13in	Dimmable driver	**MS** - Motion Sensor
	60K - 6000K		**CU** - Custom design[2]	**FIII** - Flush lens Type III	**30K** - 3000K	**12** - 12ft pole	**CU** - Custom design[2]	**60K** - 6000K	**B** - 9.25in		**RC** - GFCI receptacle
	R - Red			**FV** - Flush lens Type V	**36K** - 3600K	**14** - 14ft pole		**R** - Red			
	G - Green			**DII** - Dome lens Type II	**40K**- 4000K	**16** - 16ft pole		**G** - Green			
	B - Blue			**DIII** - Dome lens Type III	**50K** - 5000K	**18** - 18ft pole		**B** - Blue			
	Y - Yellow			**DV** - Dome lens Type V	**57K** - 5700K	**19** - 19ft pole		**Y** - Yellow			
	GB - Glacier Blue				**65K** - 6500K			**GB** - Glacier Blue			
	NA - No Accent							**NA** - No Accent			

[1] Nominal lumen value.
[2] Consult factory.
Dark sky compliant options.

NOTES

6330 Zéphirin-Paquet Street - Local 1B
G2C 0M3 Québec QC - Canada
info@zilux.com - 418 842-3222

We reserve the right to change specifications and equipment without notice.

CONSTRUCTION

Aluminum tapered pole and head assembly made of extruded aluminum, digitally printed aluminum composite panels and cast aluminum. The construction is chemically bonded together to create a robust assembly and a seamless look. The pole is fully prewired in factory and features a proprietary KwikLock™ tenon and quick connector for ease of installation and serviceability.

LIGHT MODULES

High efficiency, Sealed IP67 LED modules incorporating heat sink for efficient heat dissipation and an impact-resistant lens. The lens is available in two shapes: dome to maximize output or flush for reduced uplight and glare control.

LED ACCENTS

Our unique design integrates LED Accents as an option, covered by a printed acrylic diffuser that matches the selected fixture finish. The accents are located on the four corners of the pole and the position on the head varies according to the model. The accents color can be specified from a variety of options.

ELECTRICAL

CETL US listed for wet location and certified to CSA STDs C22.2 250.0, 206 and conforms to UL STDs 1598. Surge protected 100-277V 50/60hz Class II integral dimmable drivers located at the base and accessible through hand hole. Dimmable drivers are compatible with ELV, MLV, 0-10V, 1-10V, PWM and wired to a potentiometer in factory. Corner accents are on an independent circuit for individual dimming. Operating temperature is -40°C to 70°C / -40°F to 158°F.

FINISH

Pretreated primer coated aluminum, then digitally printed with the selected texture or design. Consult the factory for custom textures application or to integrate any logos, indications or other references to your finish. The printed surface is covered with our proprietary DUROCLEAR clear coat, tested in accordance with ASTM standards for the following:

- **ASTM G155** UV resistance
- **ASTM D6578** Graffiti Resistance
- **ASTM D3389** Abrasion Test
- **ASTM B117** Salt Spray Resistance
- **ASTM D3359-B** Adhesion Test

WARRANTY

15-YEAR LIMITED WARRANTY

15 years limited warranty against defects in workmanship on pole and fixture heads and excessive fading of the finish. LEDs are covered for 10 years and Drivers are covered for 7 years. Please refer to the warranty section of our website for additional information : zilux warranty

DIMENSIONS

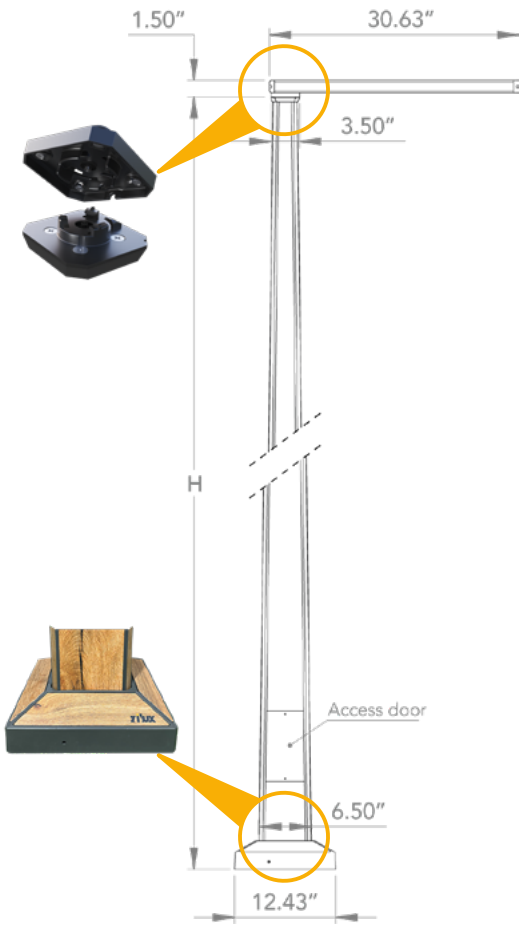

BASE PLATE AND COVER

The base plate and base cover are made of heavy duty cast aluminum. Base plate is anchored using factory supplied mounting hardware. The base cover is made of two pieces and features printed aluminum surfaces that match the selected texture.

BASE PLATE :

Dual bolt circles available

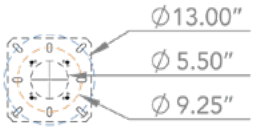

BASE COVER :

Two-piece aluminium cover digitally printed

*Recommended anchor bolts projection

SERVICEABILITY

Drivers are accessible through the hand hole at the base of the post. Access door is flush mounted, digitally printed to the match the pole finish and secured with anti-theft screws. All electrical components are field serviceable.

zilux AESTHETICALLY LUMINOUS
6330 Zéphirin-Paquet Street - Local 1B
G2C 0M3 Québec QC - Canada
info@zilux.com - 418 842-3222

Version April 2025

We reserve the right to change specifications and equipment without notice.

WOOD

WD-1

WD-2

WD-3

WD-4

WD-5

WD-6

WD-7

WD-8

WD-9

WD-10

WD-11

WD-12

WD-13

WD-14

WD-15

WD-16

WD-17

WD-18

WD-19

WD-20

WD-21

WD-22

MARBLE

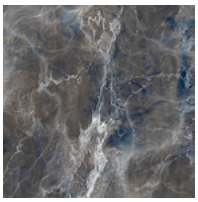
MB-1

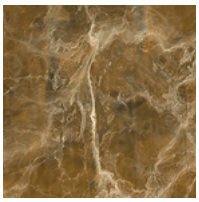
MB-2

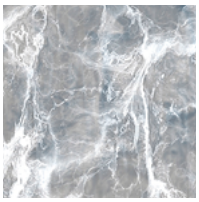
MB-3

RUST METAL

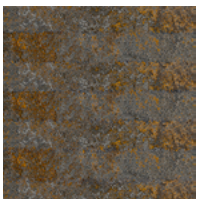
RM-1

RM-2

6330 Zéphirin-Paquet Street - Local 1B
G2C 0M3 Québec QC - Canada
info@zilux.com - 418 842-3222

We reserve the right to change specifications and equipment without notice.

DIAMOND

DM-1

DM-3

CONCRETE

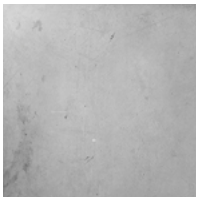
CC-1

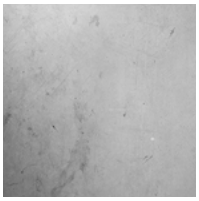
CC-2

VEGETAL

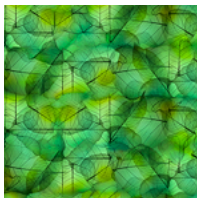
VG-1

VG-2

STONE

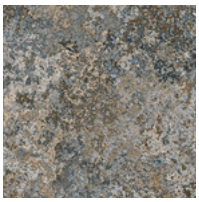
ST-1

MISCELLANEOUS

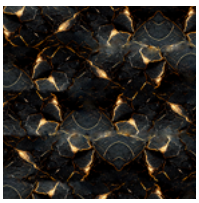
MISC-1

*Consult us to design your new texture

Online textures

6330 Zéphirin-Paquet Street - Local 1B
G2C 0M3 Québec QC - Canada
info@zilux.com - 418 842-3222

We reserve the right to change specifications and equipment without notice.