SPECIFICATION SHEET

LIT BATTENS

zilux.com

6330 Zéphirin-Paquet Street - Local 1B
G2C 0M3 Québec QC - Canada
info@zilux.com - 418 842-3222

Version October 2025

We reserve the right to change specifications and equipment without notice.

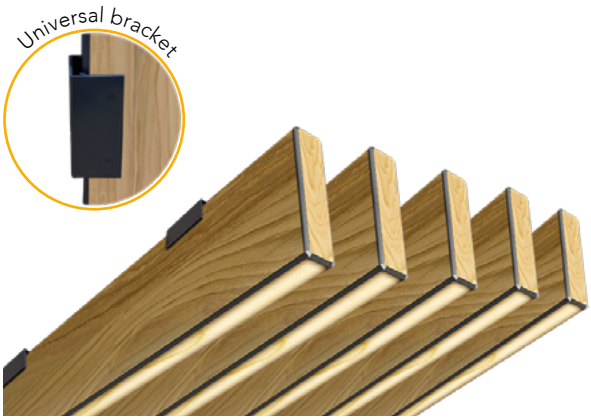

- 3 standard sizes: 2" x 4", 2" x 6", 2" x 8"
- Lengths of 8', 12', and 16'
- LED Accent on ONE side
- Choice of LED accent colors and color temperature
- High-definition digital printing
- Low-maintenance DuroClear™ protective coating (no stains, no discoloration, easy to clean)
- Extrusion and bracket painted RAL 7022
- Bracket : surface or end installation

ORDERING OPTIONS

Model	Dimensions	Length	Color Temperature	Luminous flux	Texture/Color	Options
LB	**----**	**----**	**----**	**----**	**----**	**----**
LB - Lit Battens-Model	**2X4** - 2"x 4"	**8** - 8ft	**40K** - 4000K	**FS** - 1.37 w/ft	**XXXX** - See texture chart	**BREXT** - End Bracket
	2X6 - 2"x 6"	**12** - 12ft	**60K** - 6000K	**FE** - 2.75 w/ft	**CU** - Custom design[1]	**BRUNV** - Universal Bracket
	2X8 - 2"x 8"	**16** - 16ft	**R** - Red			
	CU - Custom length[1]	**CU** - Custom length[1]	**G** - Green			
			B - Blue	**FS** - 1.37 w/ft		
			Y - Yellow			
			GB - Glacier Blue			
			RGBW - RGB + 6000K	**FS** - 6.5 w/ft		

[1] Consult the manufacturer.

DRIVERS

Control	Wattage
DVDMX	
DVDIM - ELV/Triac 0-10V Dimming driver	96W
DVDMX - RGBW Driver	96W

NUMBER OF BATTENS PER DRIVER

Length (ft) / luminous flux	40K - 60K FS - 1.37 w/ft	40K - 60K FE - 2.75 w/fti	R-G-B-Y-GB FS - 1.37 w/ft	RGBW FS - 6.5 w/ft
8	8	4	8	2
12	6	3	6	1
16	4	2	4	1

NOTES

6330 Zéphirin-Paquet Street - Local 1B
G2C 0M3 Québec QC - Canada
info@zilux.com - 418 842-3222

We reserve the right to change specifications and equipment without notice.

DIMENSIONS

Universal bracket

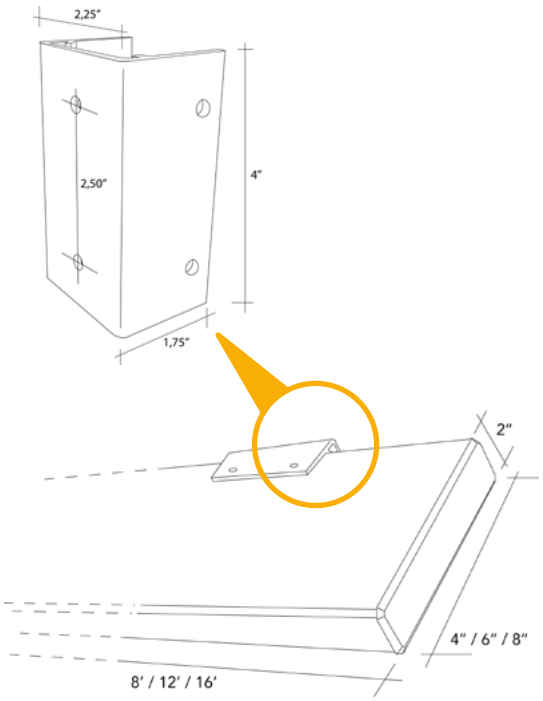

End bracket

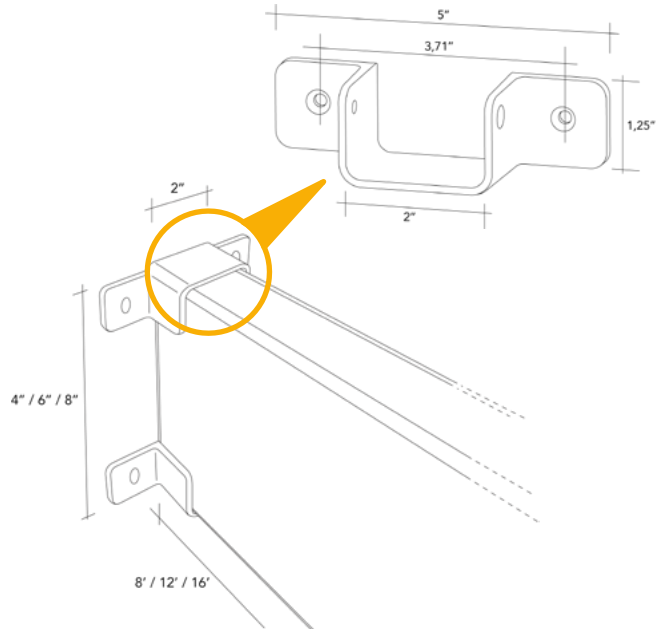

CONSTRUCTION

Extruded aluminum battens, digitally printed aluminum composite panels, and cast aluminum. The components are chemically bonded to form a solid, uniform structure with no visible joints. The battens are fully pre-wired at the factory for easy installation and maintenance.

LED ACCENTS

Our unique design incorporates an LED accent, covered with an acrylic diffuser printed to match the batten finish. The accent is located on ONE side. The accent color can be chosen from a variety of options.

ELECTRICAL

CETL US approved for wet locations and CSA STDs C22.2 250.0, 206 certified and UL STDs 1598 compliant. Class II full dimming driver, surge protected, 100-277V 50/60Hz, remote install. The dimming driver is compatible with ELV, MLV, 0-10V, 1-10V, PWM, and factory wired to a potentiometer. Operating temperature is -40°C to 70°C / -40°F to 158°F.

FINISH

Aluminum pretreated and coated with a primer layer, then digitally printed with the selected texture or design. Consult the factory for the application of custom textures or for the integration of logos, indications, or other references to your finish. The printed surface is coated with our DUROCLEAR™ transparent layer, tested in accordance with ASTM standards for the following:

- **ASTM G155** UV resistance
- **ASTM D6578** Graffiti Resistance
- **ASTM D3389** Abrasion Test
- **ASTM B117** Salt Spray Resistance
- **ASTM D3359-B** Adhesion Test

WARRANTY

15-YEAR LIMITED WARRANTY

15-year limited warranty against manufacturing defects in battens and excessive discoloration of the finish. LEDs are guaranteed for 10 years and drivers for 7 years. Please refer to the warranty section of our website for more information : Zilux warranty

6330 Zéphirin-Paquet Street - Local 1B
G2C 0M3 Québec QC - Canada
info@zilux.com - 418 842-3222

We reserve the right to change specifications and equipment without notice.

BOIS

WD-1

WD-2

WD-3

WD-4

WD-5

WD-6

WD-7

WD-8

WD-9

WD-10

WD-11

WD-12

WD-13

WD-14

WD-15

WD-16

WD-17

WD-18

WD-19

WD-20

WD-21

WD-22

DIVERS

*Consult us to design your new texture

Online textures

6330 Zéphirin-Paquet Street - Local 1B
G2C 0M3 Québec QC - Canada
info@zilux.com - 418 842-3222

We reserve the right to change specifications and equipment without notice.